PIC32MX AUDIO SYNTH BOARD - MCU PIN ASSIGNMENTS

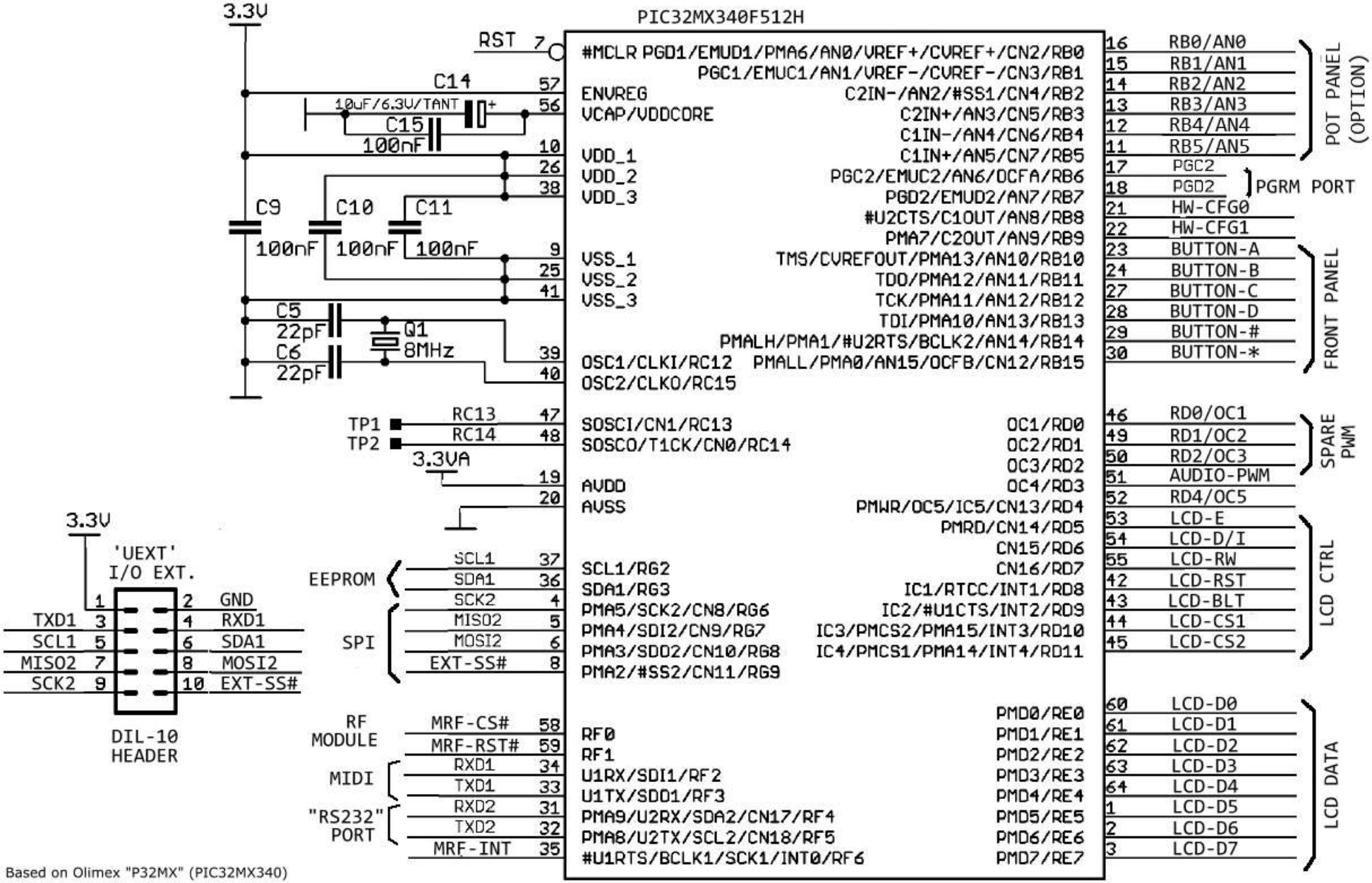

Based on Olimex "P32MX" (PIC32MX340)
Prototyping Board www.olimex.com